CYLINDER BLOCK

SERVICE TOOLS

Description	Part Number	Page
CRANKSHAFT LOCKING TOOL	529 036 272	14
OIL SEAL INSTALLER	529 036 277	5
PISTON CIRCLP INSTALLER	529 036 207	20
PISTON RING COMPRESSOR	529 036 208	22
PTO ADAPTER	529 036 273	14

SERVICE PRODUCTS

Description	Part Number	Page
LOCTITE 243 (BLUE)	293 800 060	6
LOCTITE 5910	293 800 081	11
LOCTITE CHISEL (GASKET REMOVER)	413 708 500	9
TRIPLE-GUARD GREASE	296 000 329	5–6

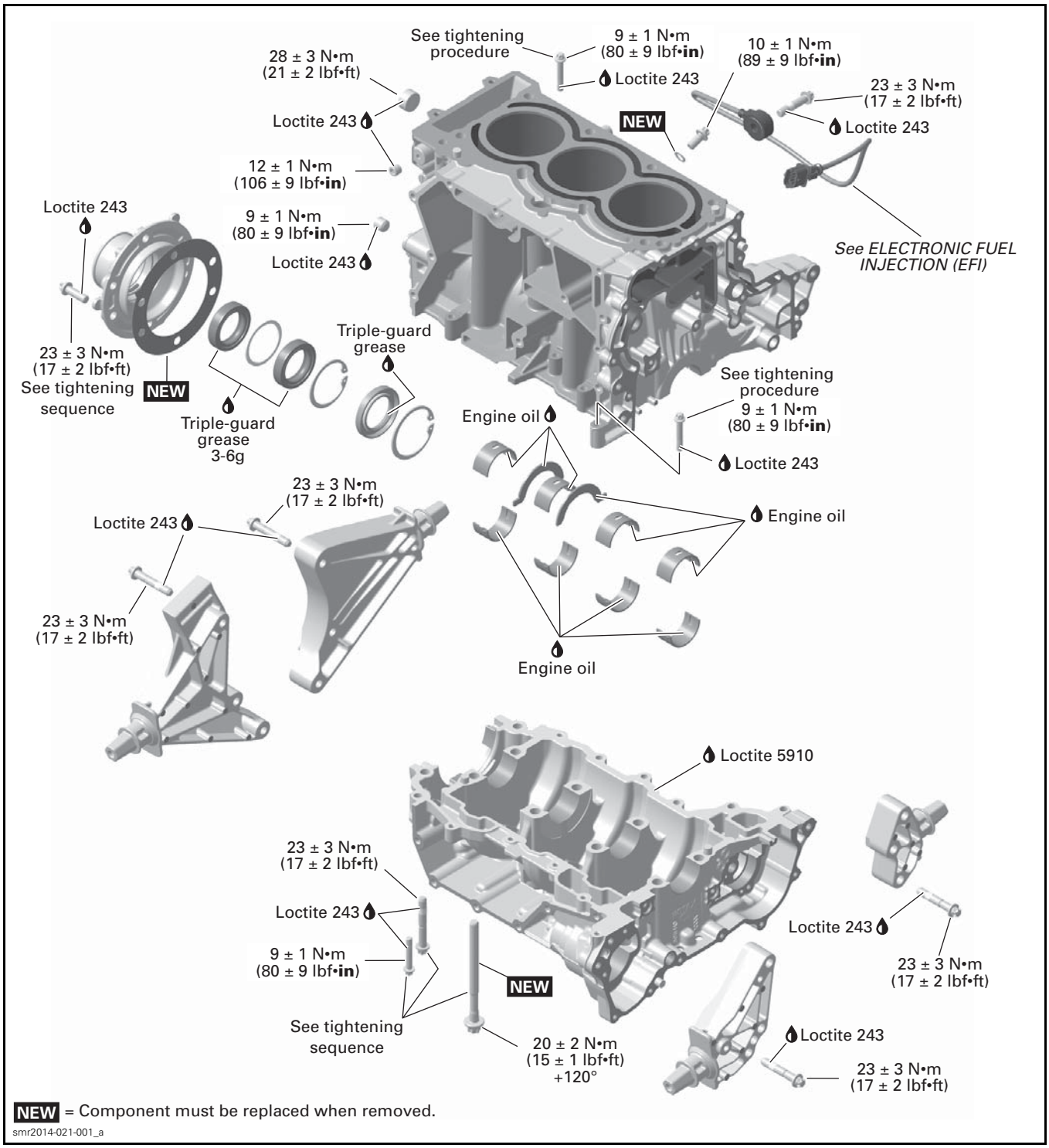
See tightening procedure
9 ± 1 N•m (80 ± 9 lbf•in)
Loctite 243
10 ± 1 N•m (89 ± 9 lbf•in)
28 ± 3 N•m (21 ± 2 lbf•ft)
23 ± 3 N•m (17 ± 2 lbf•ft)
Loctite 243
NEW
Loctite 243
Loctite 243
12 ± 1 N•m (106 ± 9 lbf•in)
Loctite 243
9 ± 1 N•m (80 ± 9 lbf•in)
Loctite 243
See ELECTRONIC FUEL INJECTION (EFI)
Triple-guard grease
23 ± 3 N•m (17 ± 2 lbf•ft)
See tightening sequence
NEW
Triple-guard grease 3-6g
See tightening procedure
9 ± 1 N•m (80 ± 9 lbf•in)
Engine oil
Loctite 243
23 ± 3 N•m (17 ± 2 lbf•ft)
Loctite 243
Engine oil
23 ± 3 N•m (17 ± 2 lbf•ft)
Engine oil
Loctite 5910
23 ± 3 N•m (17 ± 2 lbf•ft)
Loctite 243
9 ± 1 N•m (80 ± 9 lbf•in)
NEW
Loctite 243
23 ± 3 N•m (17 ± 2 lbf•ft)
See tightening sequence
20 ± 2 N•m (15 ± 1 lbf•ft) +120°
Loctite 243
23 ± 3 N•m (17 ± 2 lbf•ft)
NEW = Component must be replaced when removed.
smr2014-021-001_a

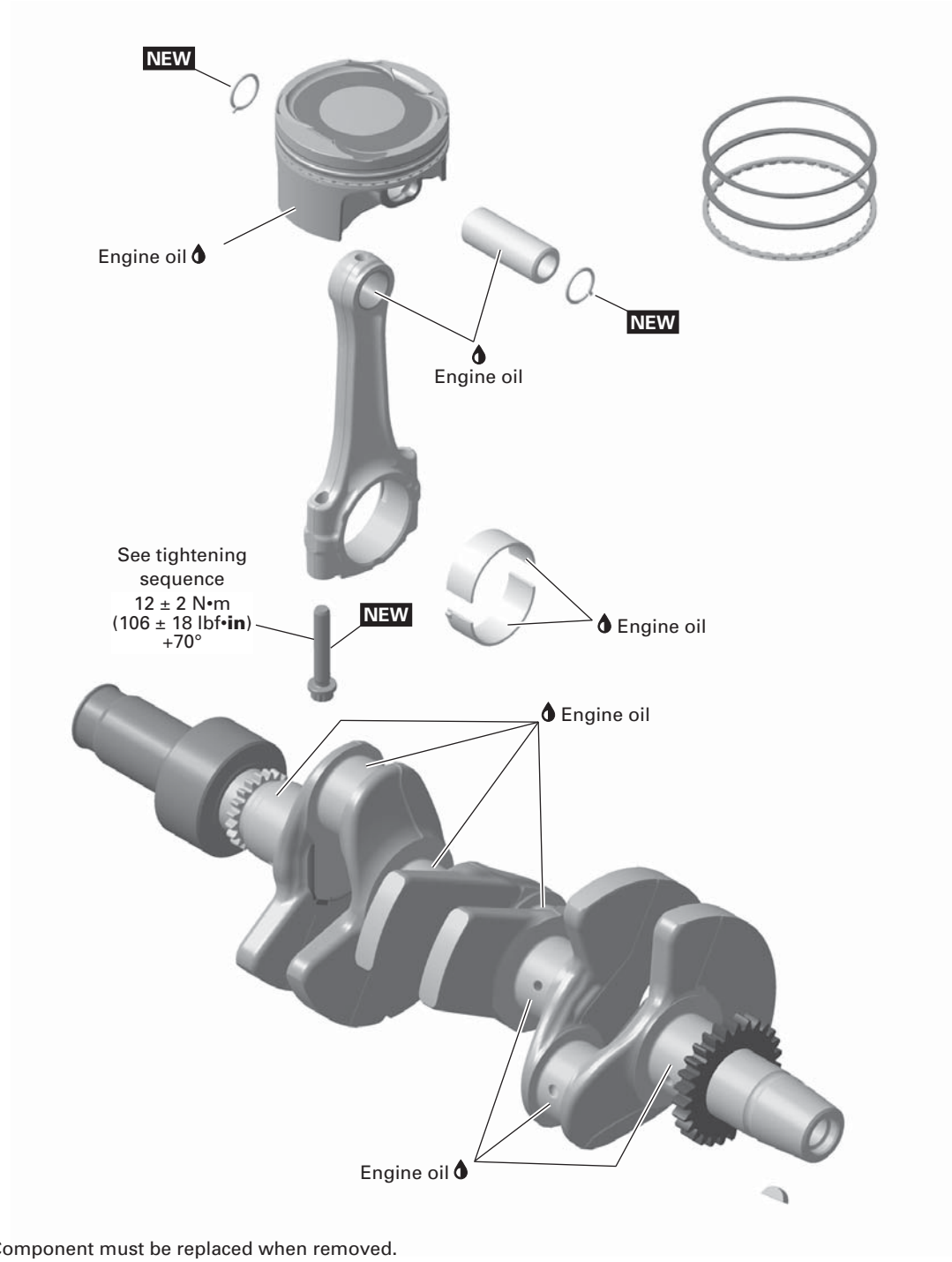

NEW = Component must be replaced when removed.

smr2014-021-002_a

GENERAL

When disassembling parts that are duplicated in the engine, (e.g.: pistons, connecting rods etc.), it is strongly recommended to note their position and to keep the parts of the same assembly as a "group". If you find a defective component, it would be much easier to find the cause of the failure. Since parts were broken-in during engine operation, they will maintain their matched fit when reassembled together within their "group".

TROUBLESHOOTING

Always check for fault codes. If a fault code is detected, service the fault code first. Refer to *DIAGNOSTIC SYSTEM AND FAULT CODES* subsection.

UNUSUAL ENGINE NOISE OR VIBRATIONS

1. Heavy wear on plain bearings.
   - *Check radial play of plain bearings. Replace if out of specification.*
2. Crankshaft axial play out of specification.
   - *Measure crankshaft axial play. If crankshaft axial play is out of specification, replace thrust washers.*
3. Connecting rod axial play out of specification.
   - *Measure connecting rod axial play on crankshaft. Replace connecting rod or crankshaft if out of specification.*
4. Connecting rod screws got loose.
   - *Replace damaged components and retighten screws with the recommended torque.*

BLUE SMOKE IN THE EXHAUST

1. Oil scraper rings worn out.
   - *Replace piston rings.*

ENGINE SUDDENLY TURNS OFF (POOR IDLING)

1. Piston rings worn out.
   - *Replace piston rings.*
2. Piston/cylinder clearance out of specification.
   - *Check piston/cylinder clearance. Replace if out of specification.*
3. Melted or broken piston.
   - *Replace piston and cylinder block if necessary.*

PROCEDURES

PTO COVER AND PTO OIL SEALS

PTO Cover Access

NOTE: To replace the PTO oil seal, it is not necessary to remove engine from the vehicle.

Remove central body. Refer to *BODY*.

Remove drive shaft. Refer to *DRIVE SHAFT*.

PTO Cover Removal

Remove screws retaining the PTO cover.

Remove PTO cover and discard gasket.

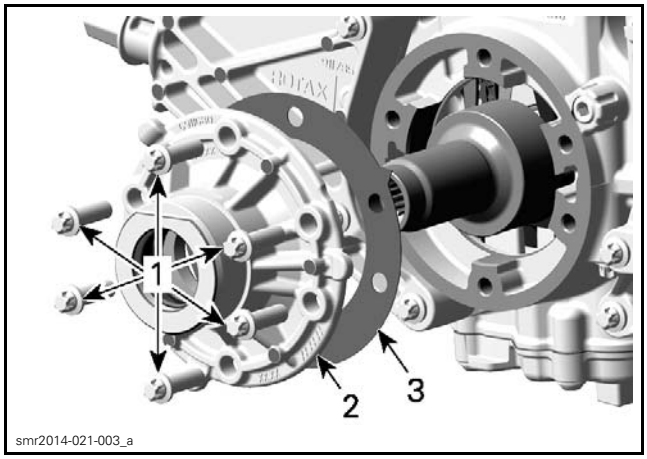

1. PTO cover screws
2. PTO cover
3. Gasket

PTO Oil Seals Replacement

PTO Oil Seals Removal

1. Use pliers to remove inner retaining ring.
2. Pry out inner oil seal and discard it.

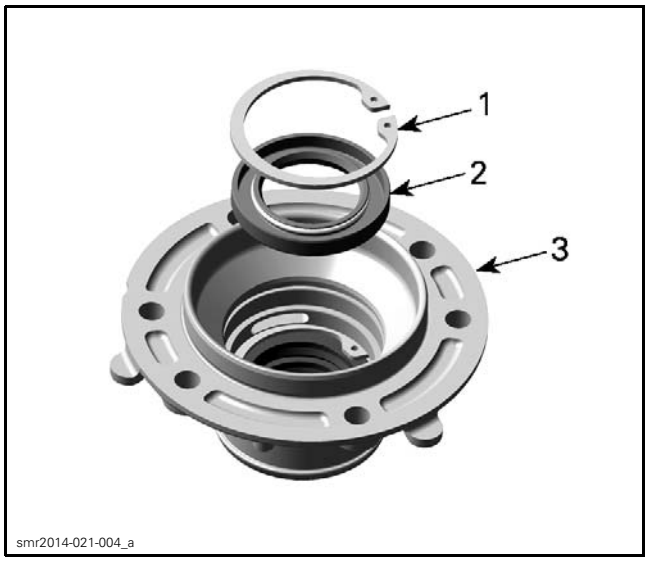

1. Inner retaining ring
2. Inner oil seal
3. PTO cover

3. Use pliers to remove outer retaining ring.
4. Pry out middle oil seal and discard it.
5. Remove distance ring.
6. Pry out outer oil seal and discard it.

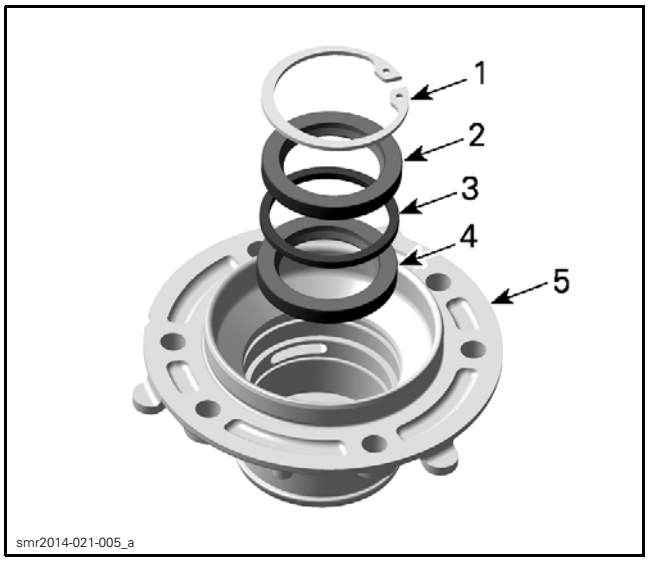

1. Outer retaining ring
2. Middle oil seal
3. Distance ring
4. Outer oil seal
5. PTO cover

PTO Oil Seals Installation

NOTE: Check the oil seal running surface of crankshaft for grooves and deposits, before installation of NEW oil seals.

1. Clean crankshaft PTO side from deposits.
2. Clean oil seal areas in PTO cover.
3. Apply engine oil on oil seal seat in PTO cover.
4. Press NEW outer oil seal in PTO cover.

NOTICE Oil seal must be installed with sealing lip facing away from the engine.

REQUIRED TOOL	
OIL SEAL INSTALLER (P/N 529 036 277)	

5. Install distance ring.
6. Apply engine oil on oil seal seat in PTO cover.
7. Backfill middle oil seal with grease.

OIL SEALS LUBRICATION	
Service product	TRIPLE-GUARD GREASE (P/N 296 000 329)

8. Press NEW middle oil seal in PTO cover.

NOTICE Oil seal must be installed with sealing lip facing away from the engine.

9. Lubricate sealing lips of oil seals and backfill room between outer and middle oil seal with 3 g to 6 g (.1 oz to .2 oz) of specified grease.

OIL SEALS LUBRICATION	
Service product	TRIPLE-GUARD GREASE (P/N 296 000 329)

10. Install outer retaining ring.
11. Apply engine oil on oil seal seat in PTO cover.
12. Press NEW inner oil seal in PTO cover.

NOTICE Oil seal must be installed with sealing lip towards the engine.

13. Lubricate sealing lip of oil seal.

OIL SEALS LUBRICATION	
Service product	TRIPLE-GUARD GREASE (P/N 296 000 329)

14. Install inner retaining ring.

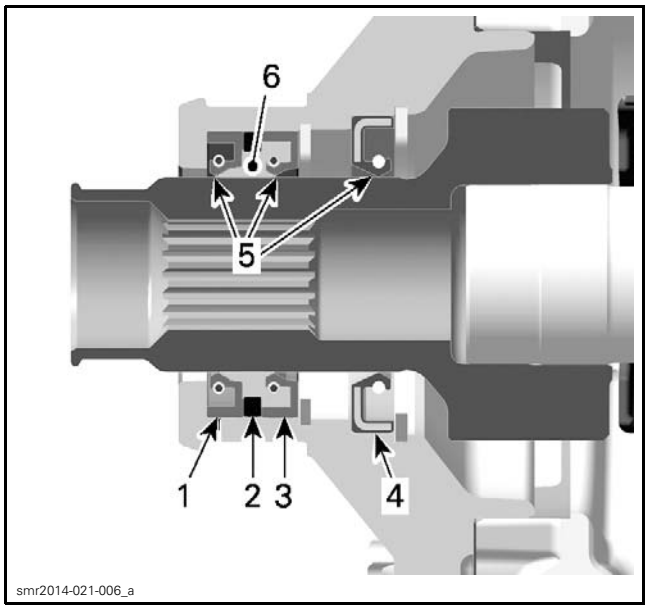

1. *Outer oil seal*
2. *Distance ring*
3. *Middle oil seal*
4. *Inner oil seal*
5. *Apply TRIPLE-GUARD GREASE (P/N 296 000 329)on sealing lips*
6. *Backfill middle oil seal and room between oil seals*

PTO Cover Installation

For installation, reverse the removal procedure. Pay attention to following details.

Install a **NEW** PTO cover gasket in proper position.

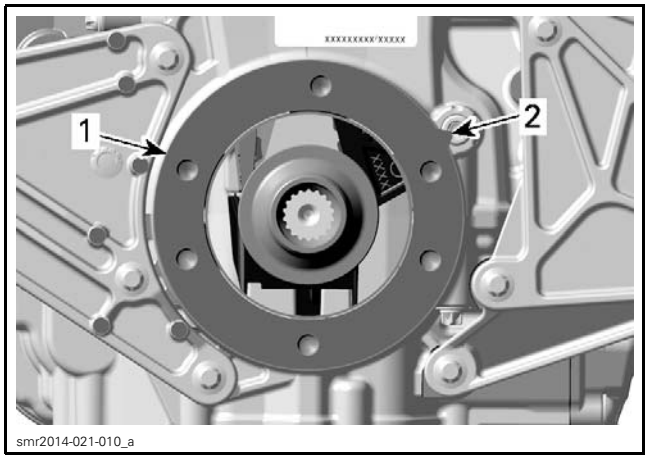

1. *Gasket*
2. *Tab*

Tighten PTO cover screws as per following sequence.

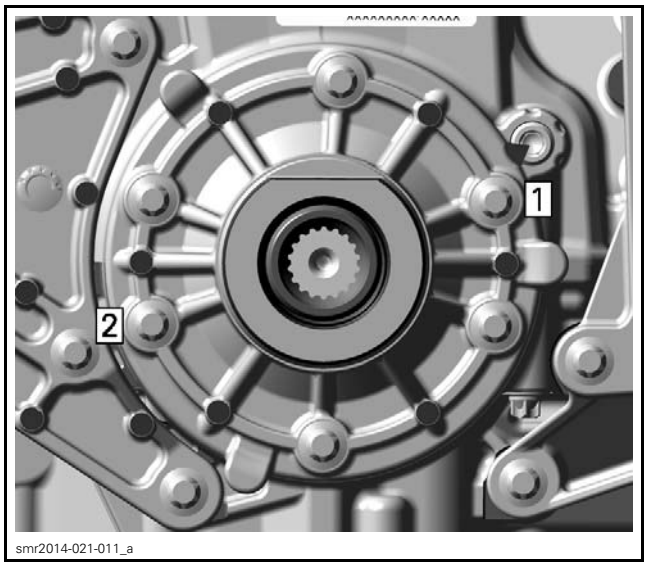

PTO COVER TIGHTENING SEQUENCE - STEP A

PTO COVER TIGHTENING PROCEDURE	
Service product	LOCTITE 243 (BLUE) (P/N 293 800 060)
STEP A	5 N•m ± 0.6 N•m (44 lbf•**in** ± 5 lbf•**in**)

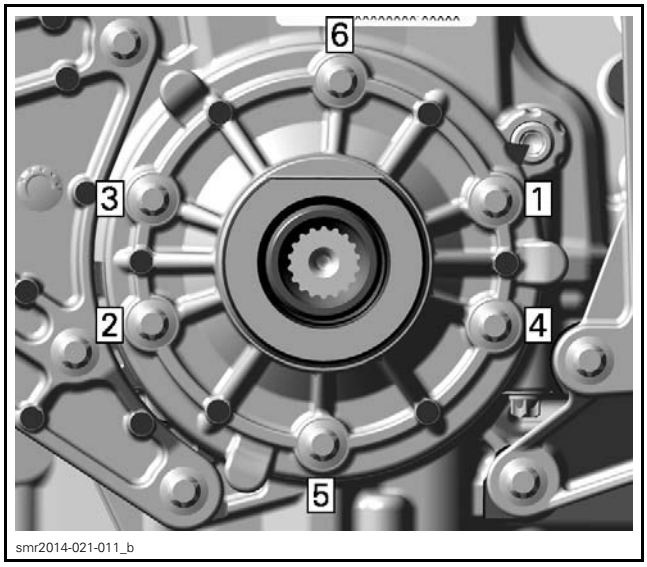

PTO COVER TIGHTENING SEQUENCE - STEP B

PTO COVER TIGHTENING PROCEDURE	
Service product	LOCTITE 243 (BLUE) (P/N 293 800 060)
STEP B	23 N•m ± 3 N•m (17 lbf•ft ± 2 lbf•ft)

CYLINDER BLOCK

Cylinder Block Disassembly

1. Remove engine from the vehicle. Refer to *ENGINE REMOVAL AND INSTALLATION* subsection.
2. Refer to *PERIODIC MAINTENANCE PROCEDURES* and drain engine oil.
3. Refer to *CYLINDER HEAD* subsection and remove:
   – Ignition coils
   – Valve cover
   – Spark plugs.
4. Lock crankshaft, refer to *CRANKSHAFT LOCKING PROCEDURE* in this subsection.
5. Remove air intake manifold. Refer to *AIR INTAKE SYSTEM* subsection.
6. Refer to *COOLING SYSTEM* subsection and remove:
   – Water pump housing
   – Thermostat
   – Water pump drive gear.
7. Refer to *LUBRICATION SYSTEM* subsection and remove:
   – Oil tank
   – Oil cooler
   – Oil pressure regulator
   – Oil pump drive gears and oil pumps
   – Oil sump cover
   – Oil strainers.
8. Refer to *MAGNETO AND STARTER* subsection and remove:
   – Magneto cover
   – Rotor
   – Starter drive gears
   – Electric starter.
9. Remove engine mount brackets.
10. Refer to *TIMING CHAIN* subsection and remove:
    – Timing chain tensioner
    – Timing chain guides.
11. Refer to *CYLINDER HEAD* subsection and remove:
    – Camshaft holders
    – Cylinder head.
12. Remove PTO cover. Refer to *PTO COVER AND PTO OIL SEALS* in this subsection.

NOTE: Before splitting the cylinder block, measure crankshaft axial play. Refer to *CRANKSHAFT* in this subsection.

13. Remove crankshaft locking tool.
14. Remove cylinder block screws.
    14.1 Start removing the M6 screws.
    14.2 Then remove the M8 screws.
    14.3 Finally remove and discard the M9 screws.

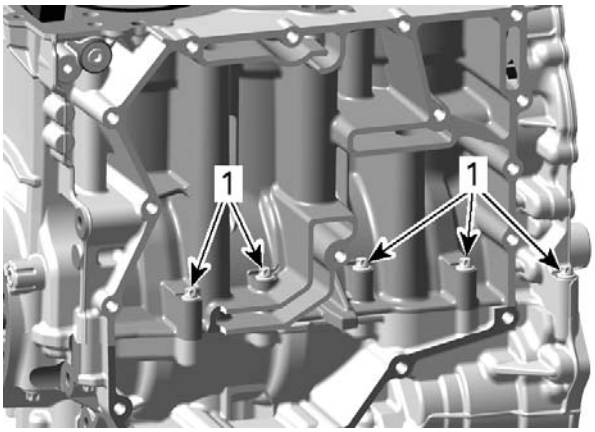

smr2014-021-012_a

INTAKE SIDE
1. Cylinder block screws (M6) screwed from top to bottom

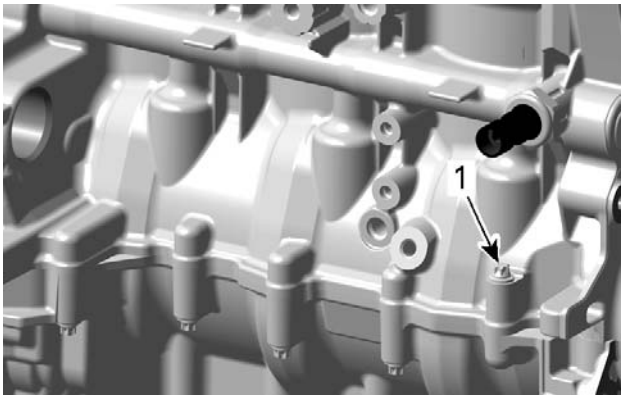

smr2014-021-013_a

EXHAUST SIDE
1. Cylinder block screw (M6) screwed from top to bottom

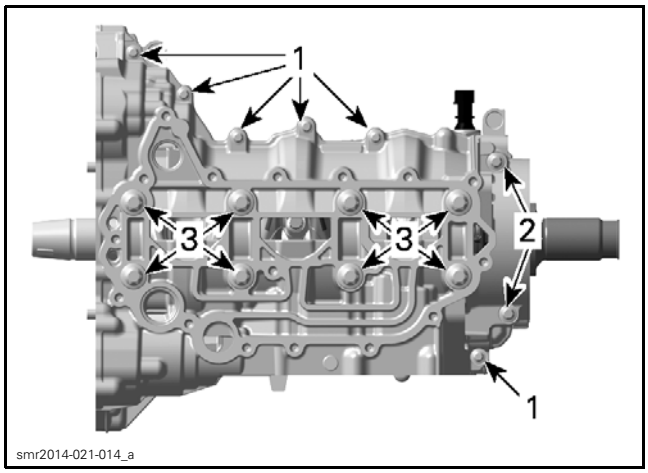

BOTTOM SIDE
1. *M6 screws*
2. *M8 screws*
3. *M9 screws (discard)*

15. Carefully remove cylinder block lower half by using a soft hammer.

NOTE: Take care not to damage the sealing surfaces of the cylinder block halves.

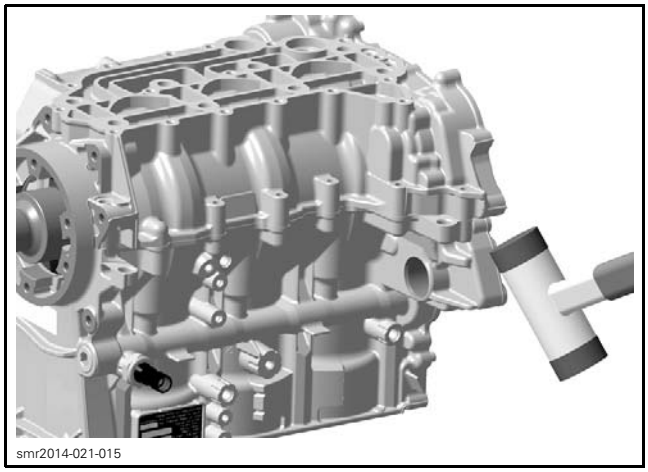

16. Remove connecting rod caps. Refer to *PISTONS AND CONNECTING RODS* in this subsection.
17. Refer to *CRANKSHAFT* in this subsection and remove:
    - Crankshaft thrust washers
    - Crankshaft.
18. Remove pistons and connecting rods. See procedure in this subsection.

Plain Bearing Removal

When the plain bearings need to be removed from the cylinder block, mark them to identify the correct position at installation. See the illustration as an example.

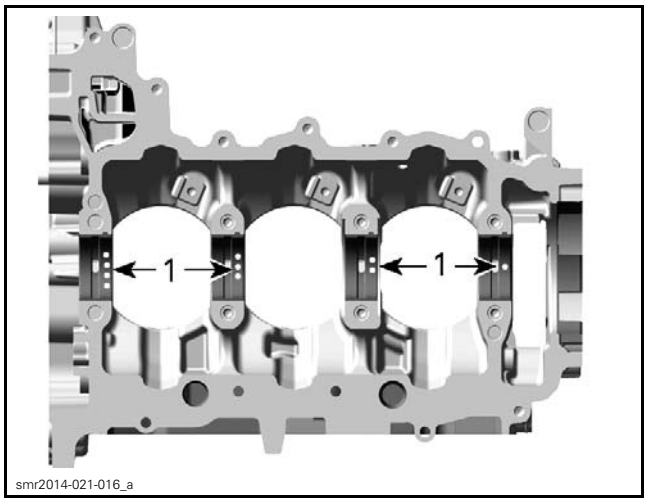

1. *Mark on crankshaft plain bearings*

Cylinder Block Cleaning

Clean cylinder block using a part cleaner, then use compressed air to dry it.

Blow out the oil orifices using compressed air and make sure they are not clogged.

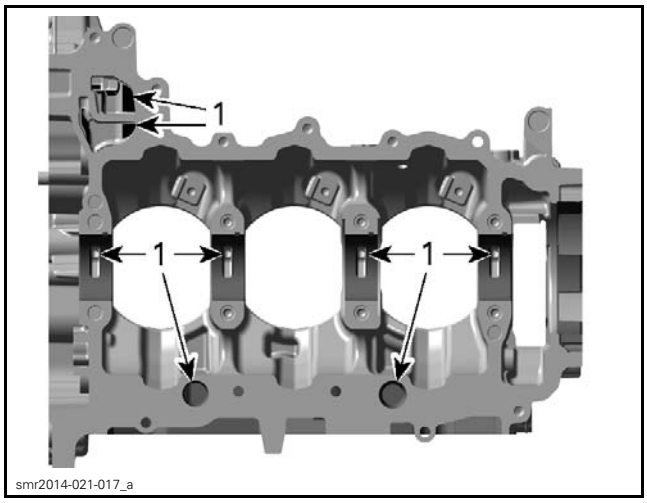

CYLINDER BLOCK UPPER HALF
1. *Oil orifices*

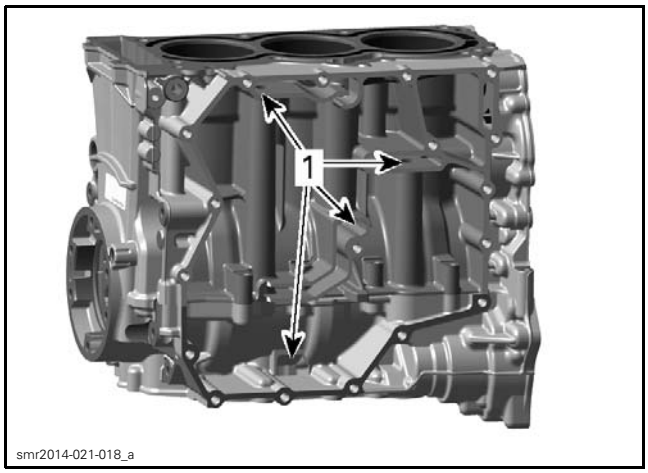

CYLINDER BLOCK - REAR
1. Oil orifices

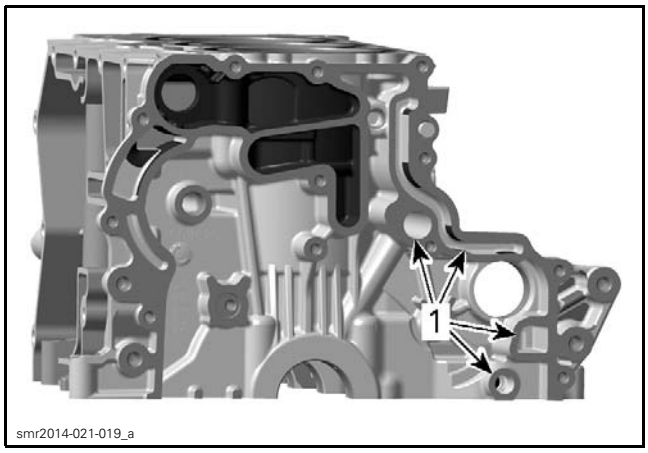

CYLINDER BLOCK - MAG SIDE
1. Oil orifices

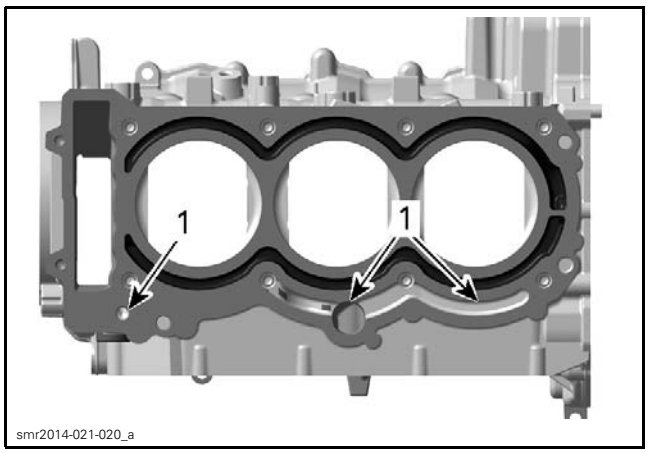

CYLINDER BLOCK - TOP
1. Oil orifices

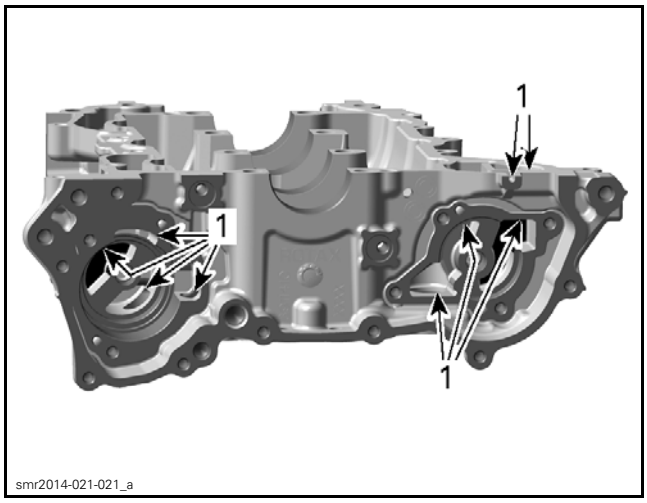

CYLINDER BLOCK LOWER HALF
1. Oil orifices

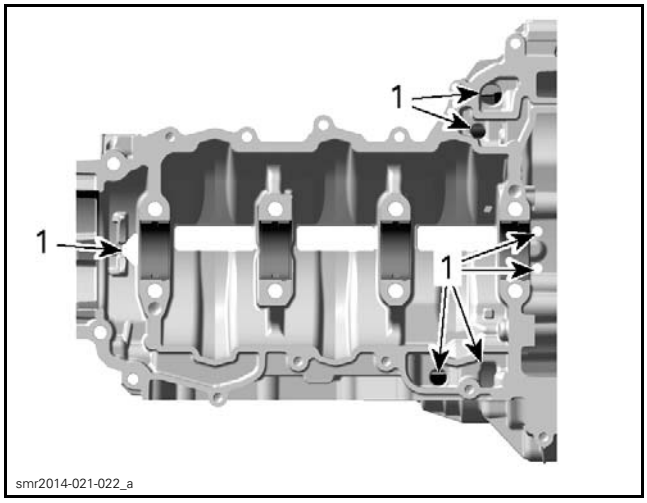

CYLINDER BLOCK LOWER HALF
1. Oil orifices

Clean all metal components in a solvent.

Clean cylinder block mating surfaces with LOCTITE CHISEL (GASKET REMOVER) (P/N 413 708 500) and a brass brush. Brush a first pass in one direction then make the final brushing perpendicularly (90°) to the first pass (cross hatch).

NOTE: Do not wipe with rags. Use a new clean hand towel only.

Cylinder Block Inspection

Check cylinder block for cracks or other damage.

Check cylinder block mating surfaces for flatness using a straight edge.

Replace cylinder block if necessary.

Check cylinder bores for cracks, scoring and wear ridges on top and bottom of the cylinders.

Cylinder Taper

Measure cylinder bore diameter at 4 recommended positions. See illustration.

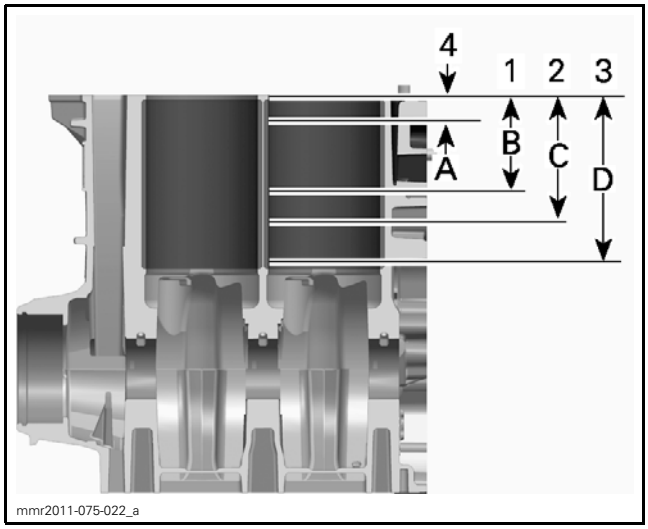

TYPICAL
1. *First measure*
2. *Second measure*
3. *Third measure*
4. *Fourth measure*

A. 5 mm to 10 mm (.197 in to .394 in)
B. 30 mm to 35 mm (1.181 in to 1.378 in)
C. 57 mm to 62 mm (2.244 in to 2.441 in)
D. 111 mm to 113 mm (4.37 in to 4.449 in)

The difference between measurements should not exceed the service limit mentioned in next table.

CYLINDER TAPER	
NEW MAXIMUM	0.030 mm (.0012 in)
SERVICE LIMIT	0.050 mm (.002 in)

Cylinder Out of Round

Measure cylinder bore diameter as shown and at the same measuring points as for *CYLINDER TAPER*.

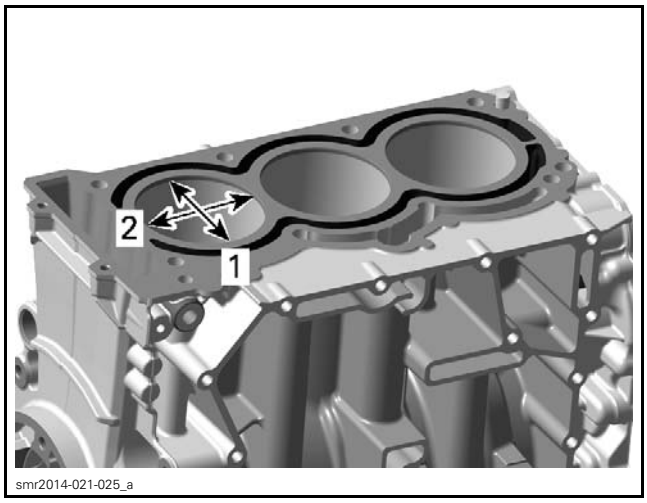

1. *Perpendicular to piston pin axis*
2. *Parallel to piston pin axis*

To obtain the cylinder out of round, calculate the difference between the perpendicular measures.

CYLINDER OUT OF ROUND	
NEW MAXIMUM	0.008 mm (.0003 in)
SERVICE LIMIT	0.030 mm (.0012 in)

Crankshaft Plain Bearings Inside Diameter

Check the plain bearings for scoring or other damages.

Measure plain bearing inside diameter and compare with crankshaft bearing journal diameter (refer to *CRANKSHAFT* in this subsection). Proceed as follows.

– Use the OLD plain bearings and put both cylinder block halves together.
– Tighten screws as described in *CYLINDER BLOCK ASSEMBLY*.
– Measure the inside diameter of the crankshaft plain bearings using a bore gauge.

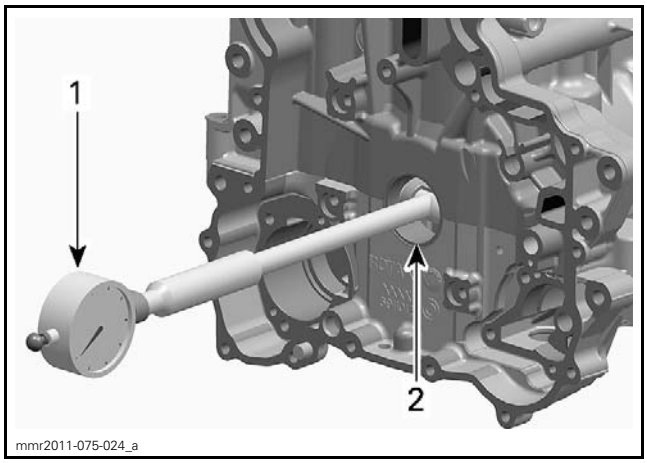

1. *Bore gauge*
2. *Crankshaft plain bearing*

CRANKSHAFT PLAIN BEARING INSIDE DIAMETER	
SERVICE LIMIT	36.080 mm (1.4205 in)

Replace bearings if they are out of specifications.

Cylinder Block Assembly

For assembly, reverse the disassembly procedure. Pay attention to the following details.

1. Correctly reinstall plain bearings as follows.
   1.1 Use NEW bearings if diameters are out of specification. Refer to *PLAIN BEARING INSPECTION* in this subsection.
   1.2 Install bearings with lubrication grooves in the cylinder block upper half.

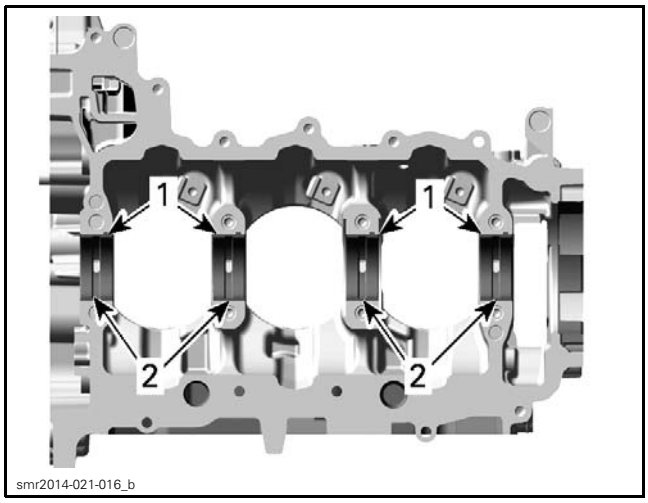

1. Plain bearings
2. Lubrication grooves

   1.3 Install flat bearings in the cylinder block lower half.

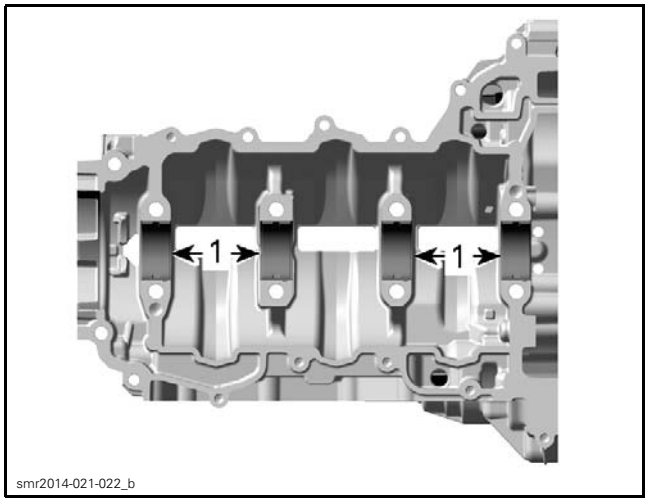

1. Flat bearings

   1.4 Bearings must be flush with the cylinder block split surface and their protrusions have to fit in the notched areas in the cylinder block seat.

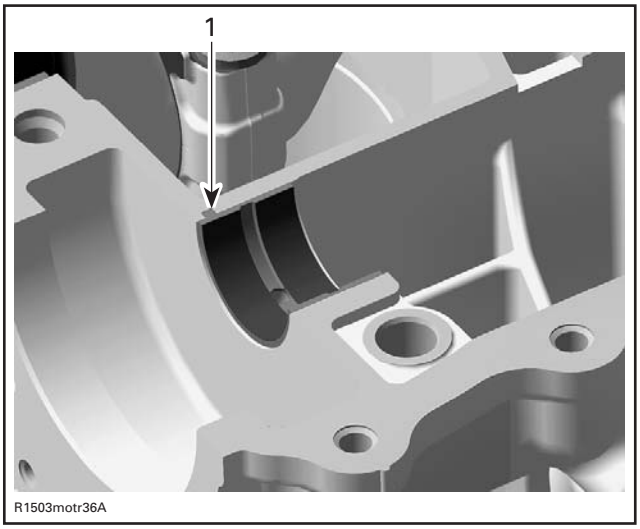

TYPICAL
1. Bearing protrusion in cylinder block notch

2. Install pistons, refer to *PISTONS AND CONNECTING RODS* in this subsection.
3. Apply engine oil on all plain bearings.
4. Install the following components:
   – Crankshaft and thrust washers (refer to *CRANKSHAFT*)
   – Connecting rod caps (refer to *PISTONS AND CONNECTING RODS*).
5. Apply LOCTITE 5910 (P/N 293 800 081) on mating surface of cylinder block lower half as shown on next illustration.

IMPORTANT: When beginning the application of the cylinder block sealant, the assembly and first tightening have to be done within 12 minutes. It is suggested to have all you need on hand to save time.

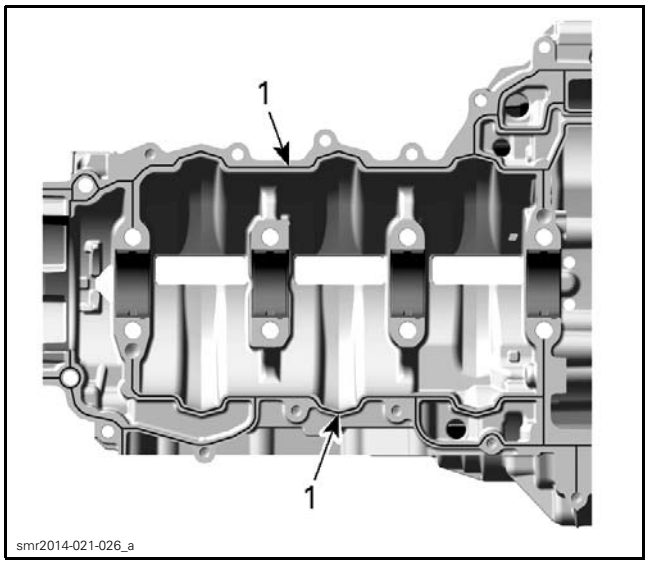

1. Apply Loctite 5910 following this pattern

NOTICE Ensure not to apply too much sealant, as it will spread out inside the cylinder block.

NOTICE Take care that the bypass passage of the engine oil pressure regulator is not clogged with sealant.

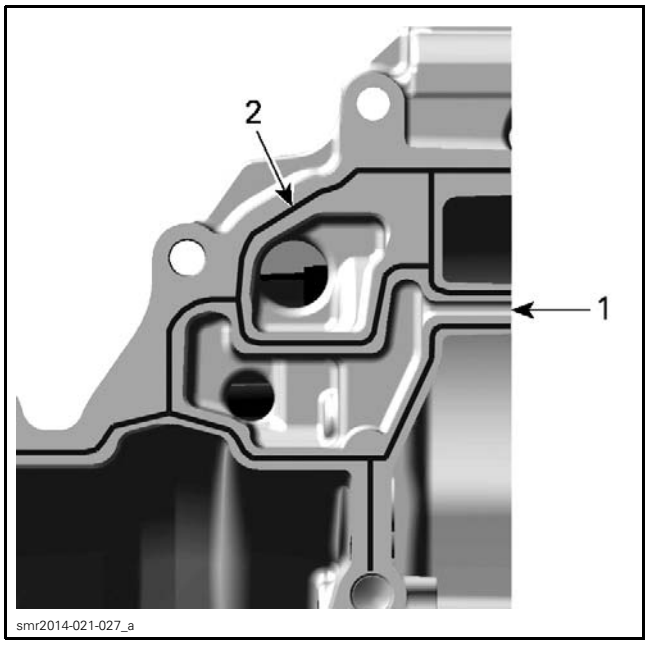

1. Bypass passage of engine oil pressure regulator
2. Loctite 5910 applied

6. Install **NEW** cylinder block M9 screws and tighten as follows.

NOTICE This assembly uses stretch screws. Always use NEW screws and strictly adhere to the tightening procedure.

6.1 Torque the M9 screws according the sequence.

CYLINDER BLOCK M9 SCREWS TIGHTENING PROCEDURE	
STEP A	20 N•m ± 2 N•m (15 lbf•ft ± 1 lbf•ft)

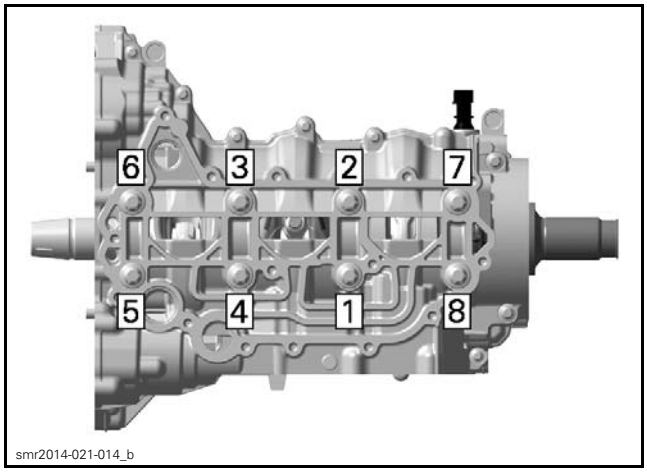

M9 SCREWS TIGHTENING SEQUENCE - FIRST AND SECOND STEPS

6.2 Use a torque angle gauge to carry out the second step, following the same sequence.

CYLINDER BLOCK M9 SCREWS TIGHTENING PROCEDURE	
STEP B	Additional 120° ± 5°

7. Install the M8 screws and tighten as follows.

CYLINDER BLOCK M8 SCREWS	
Tightening torque	23 N•m ± 2 N•m (17 lbf•ft ± 1 lbf•ft)

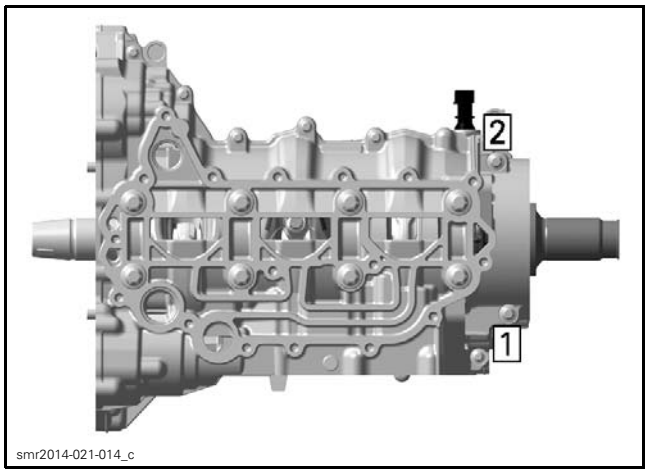

M8 SCREWS TIGHTENING SEQUENCE

8. Install the M6 screws and tighten as follows.

CYLINDER BLOCK M6 SCREWS	
Tightening torque	9 N•m ± 1 N•m (80 lbf•**in** ± 9 lbf•**in**)

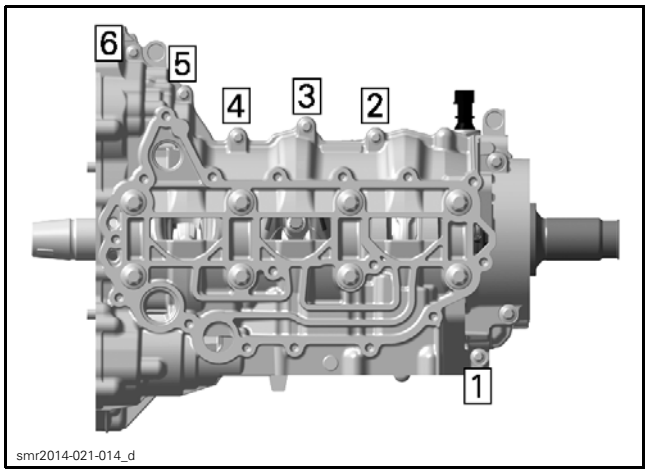

M6 SCREWS TIGHTENING SEQUENCE (BOTTOM OF CRANKCASE)

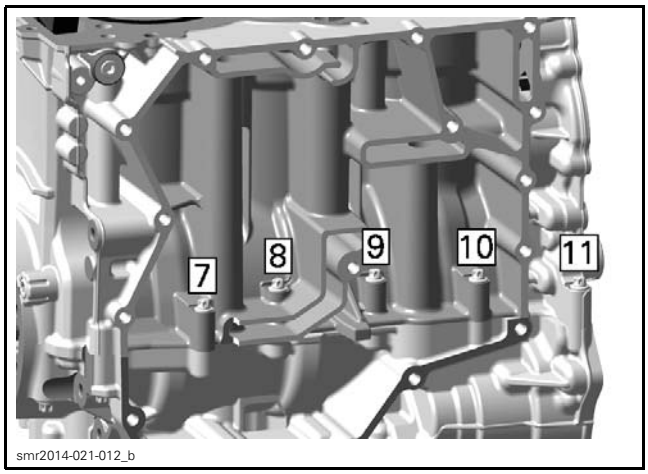

M6 SCREWS TIGHTENING SEQUENCE (INTAKE SIDE OF CRANKCASE)

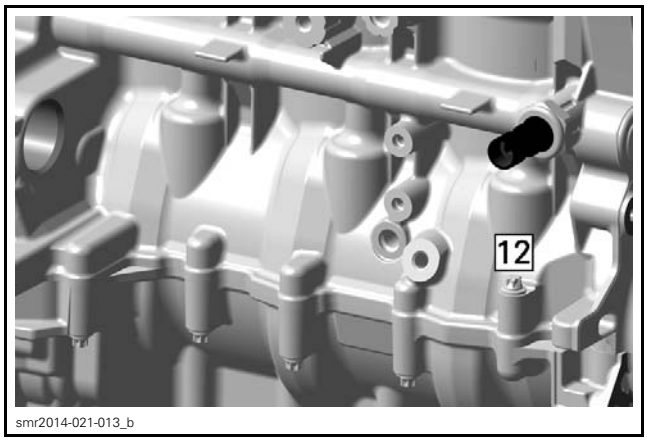

M6 SCREW TIGHTENING SEQUENCE (EXHAUST SIDE OF CRANKCASE)

NOTE: Check the crankshaft axial play before continuing the assembly. Refer to *CRANKSHAFT* in this subsection for the procedure.

9. Lubricate PTO oil seals properly before reinstalling the PTO cover. Refer to *PTO COVER AND PTO OIL SEALS* in this subsection.
10. Reassemble engine in accordance with the proper assembly procedures.

CRANKSHAFT

Crankshaft Locking Procedure

NOTICE **When crankshaft is locked, the second cylinder is set to TDC.**

Crankshaft must be locked whenever the magneto rotor retaining nut has to be removed or whenever working on the valve train.

NOTICE **When working on the valve train or timing chain, crankshaft must be locked with the marks "IN" and "EX" on the camshaft timing gears facing each other.**

1. If working on the valve train or timing chain, remove the valve cover. Refer to *CYLINDER HEAD* subsection.
2. Remove spark plugs.
3. Remove crankshaft access plug and discard gasket ring.

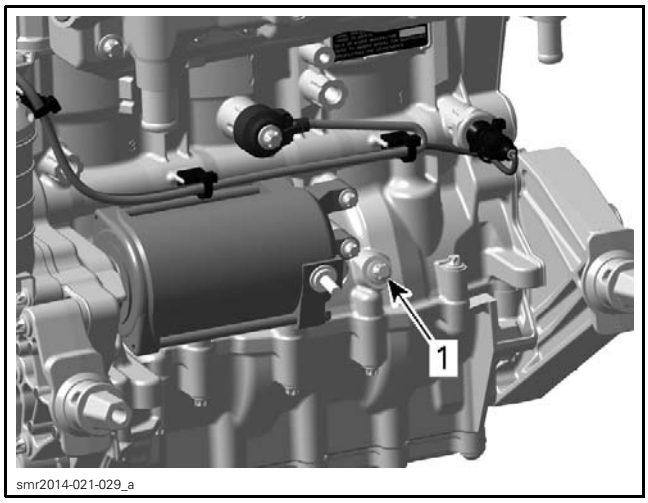

1. Crankshaft access plug

4. Turn engine on PTO side counterclockwise to bring crankshaft to locking position.

REQUIRED TOOL	
PTO ADAPTER (P/N 529 036 273)	

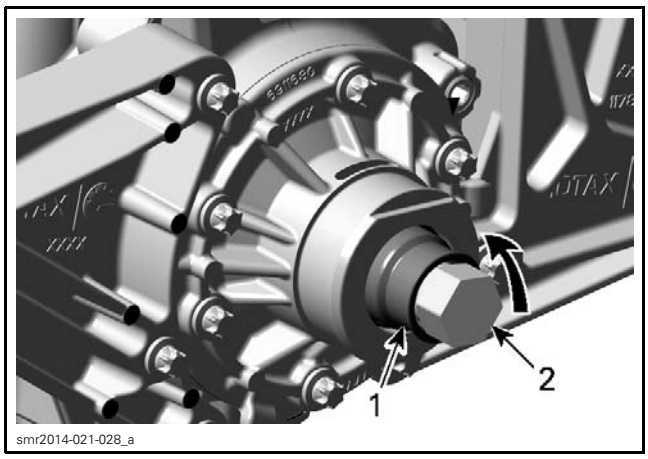

1. Crankshaft PTO side
2. PTO adapter

NOTICE **Crankshaft locking position is reached when marks "IN" and "EX" on the camshaft timing gears face each other.**

5. Use a flashlight to check if the groove in the crankshaft is aligned with the hole.
6. Lock crankshaft.

REQUIRED TOOL	
CRANKSHAFT LOCKING TOOL (P/N 529 036 272)	

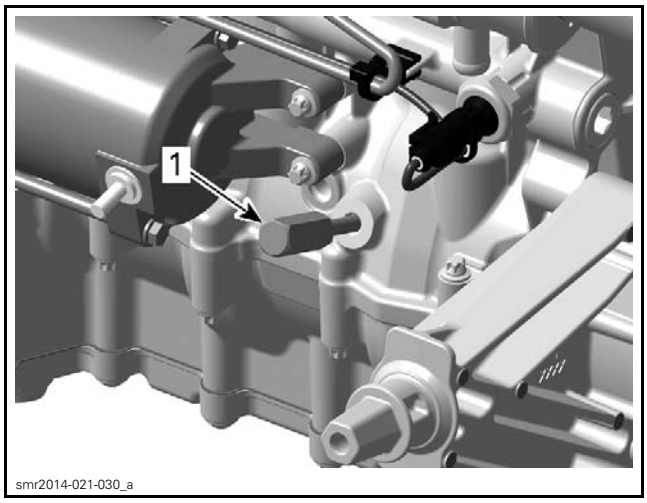

1. Crankshaft locking tool

Crankshaft Removal

1. Disassemble *CYLINDER BLOCK*, see procedure in this subsection.
2. Remove connecting rod caps. Refer to *PISTONS AND CONNECTING RODS* in this subsection.
3. Remove crankshaft thrust washers.

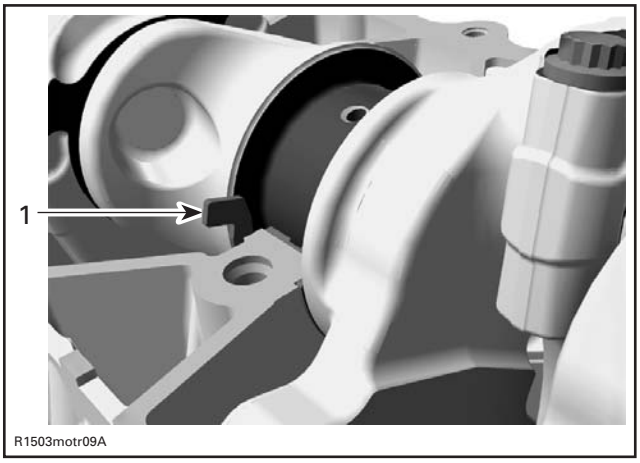

TYPICAL
1. Thrust washer

4. Remove crankshaft from cylinder block.

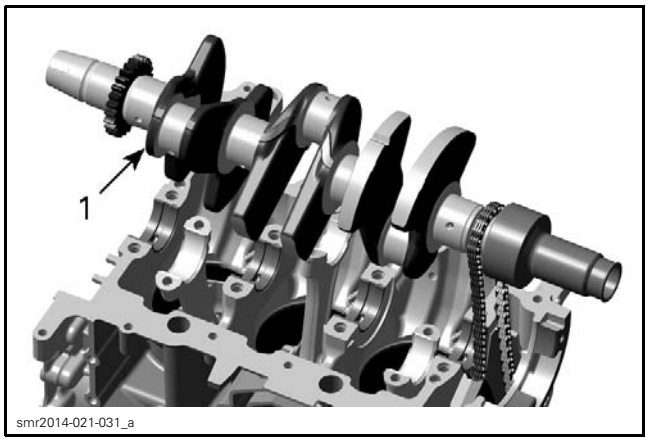

1. Crankshaft

Crankshaft Inspection

Check each bearing journal of crankshaft for scoring, scuffing, cracks or other signs of wear.

Check if crankshaft gears are worn or otherwise damaged.

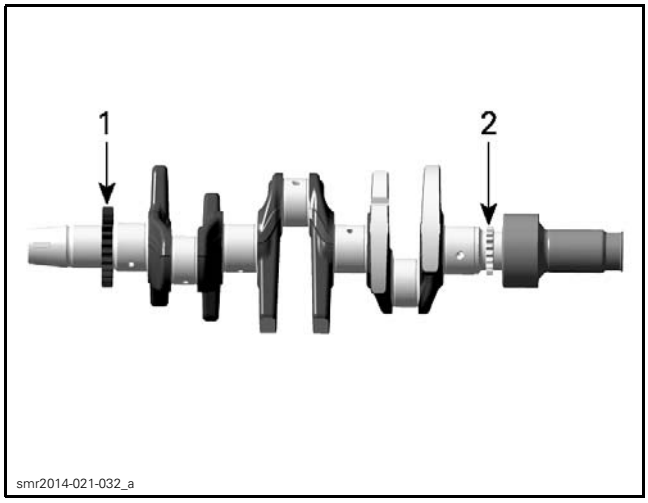

1. Oil pump drive gear
2. Crankshaft timing gear

Replace crankshaft if damaged.

Blow the oil orifices using compressed air and make sure they are not clogged.

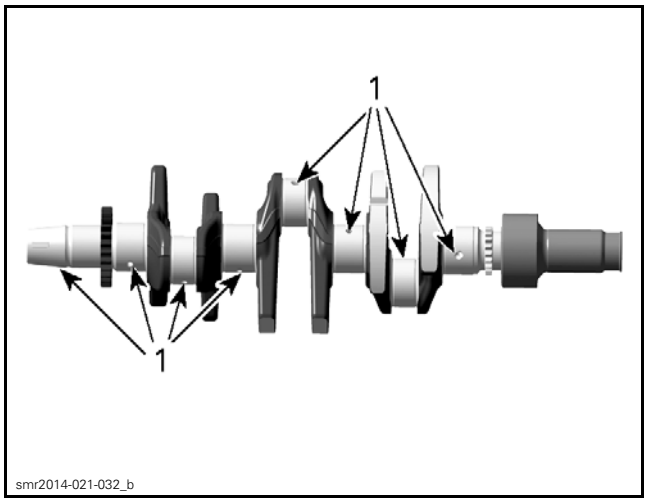

1. Check oil orifices

Crankshaft Radial Play

Measure crankshaft bearing journal diameter, using a micrometer.

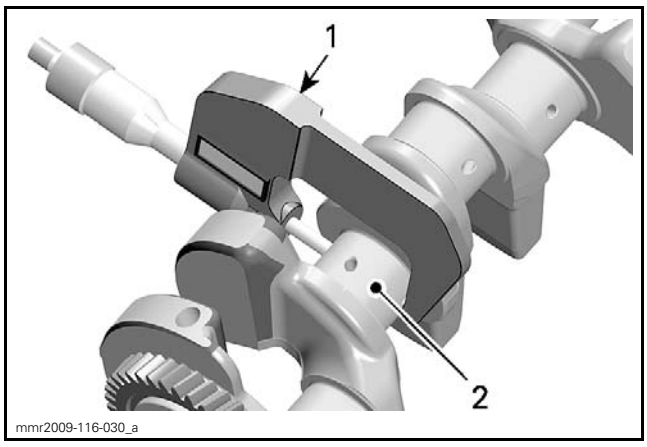

TYPICAL
1. Micrometer
2. Crankshaft area for plain bearing

To obtain the radial play, calculate the difference between the bearing journal diameter and the crankshaft plain bearings inner diameter (see *CYLINDER BLOCK*).

CRANKSHAFT BEARING JOURNAL DIAMETER	
NEW	35.990 mm to 36.006 mm (1.4169 in to 1.4176 in)
SERVICE LIMIT	35.960 mm (1.4157 in)

CRANKSHAFT RADIAL PLAY	
SERVICE LIMIT	0.08 mm (.0031 in)

Crankshaft Pin Diameter

Measure crankshaft pin diameter, using a micrometer.

To obtain the radial play, calculate the difference between the crankshaft pin diameter and the connecting rod plain bearings inner diameter (see *CONNECTING ROD INSPECTION*).

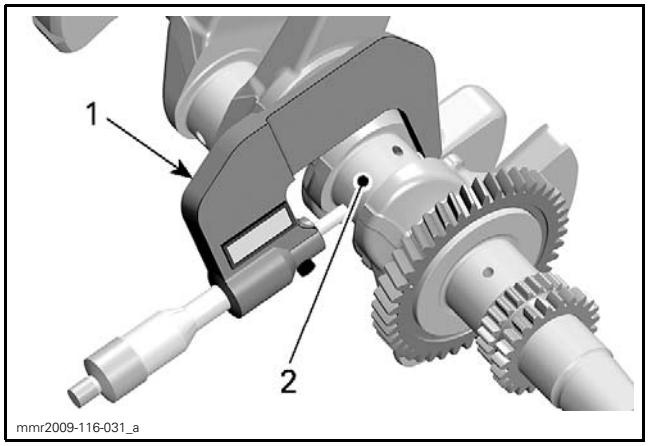

TYPICAL
1. *Micrometer*
2. *Crankshaft pin area for plain bearing*

CRANKSHAFT PIN DIAMETER	
NEW	35.979 mm to 35.995 mm (1.416 in to 1.417 in)
SERVICE LIMIT	35.969 mm (1.416 in)

CONNECTING ROD BIG END RADIAL PLAY	
SERVICE LIMIT	0.08 mm (.0031 in)

Crankshaft Axial Play

With the crankshaft in the cylinder block, measure the crankshaft axial play, using a dial indicator.

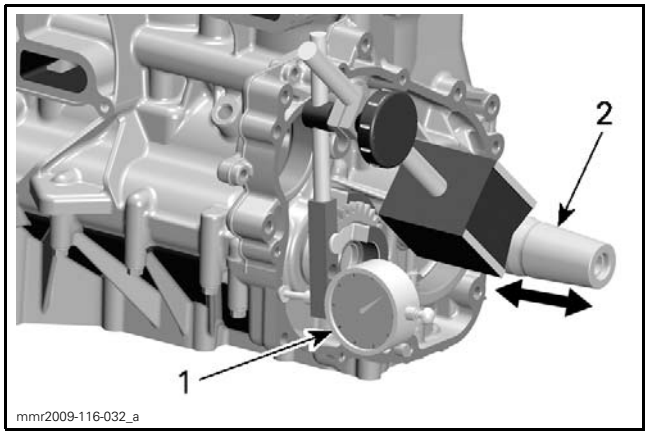

TYPICAL
1. *Dial indicator*
2. *Crankshaft*

CRANKSHAFT AXIAL PLAY	
NEW	0.120 mm to 0.352 mm (.005 in to .014 in)
SERVICE LIMIT	0.450 mm (.018 in)

If play is out of specification, replace the crankshaft thrust washers and repeat measurement.

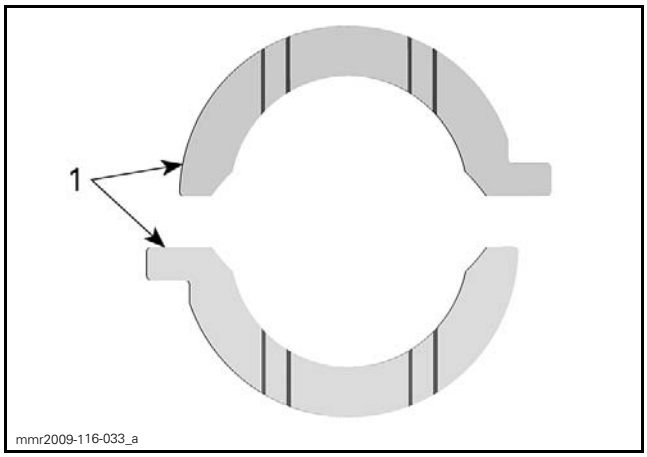

TYPICAL
1. *Crankshaft thrust washers*

Crankshaft Installation

For installation, reverse the removal procedure. Pay attention to following details.

Turn cylinder block upside down.

NOTICE **Be careful that connecting rods do not hit the cylinder block.**

Apply engine oil on all plain bearings before installing them.

Install crankshaft along with the timing chain.

Lubricate (both sides) and reinstall crankshaft thrust washers with the slots facing against crankshaft counterweights.

NOTE: Thrust washers have to be flush with the cylinder block sealing surface.

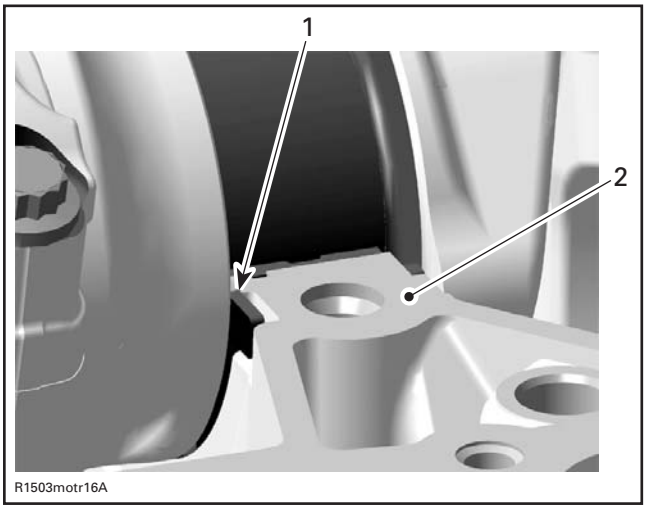

TYPICAL
1. *Thrust washer*
2. *Sealing surface*

Install connecting rod caps. Refer to *PISTONS AND CONNECTING RODS* in this subsection.

NOTICE **It is absolutely necessary to follow this procedure. Otherwise severe engine damage can occur.**

Install cylinder block lower half. Refer to *CYLINDER BLOCK* in this subsection.

Lock crankshaft before further assembly of the engine. See *CRANKSHAFT LOCKING PROCEDURE* in this subsection.

PISTONS AND CONNECTING RODS

Piston and Connecting Rod Removal

NOTE: It is recommended to measure connecting rod big end axial play prior to remove connecting rod. Refer to *CONNECTING ROD INSPECTION*.

1. Disassemble *CYLINDER BLOCK* as per procedure in this subsection.
2. Remove connecting rod cap.

NOTICE **Mark cylinder position of connecting rod before disassembly.**

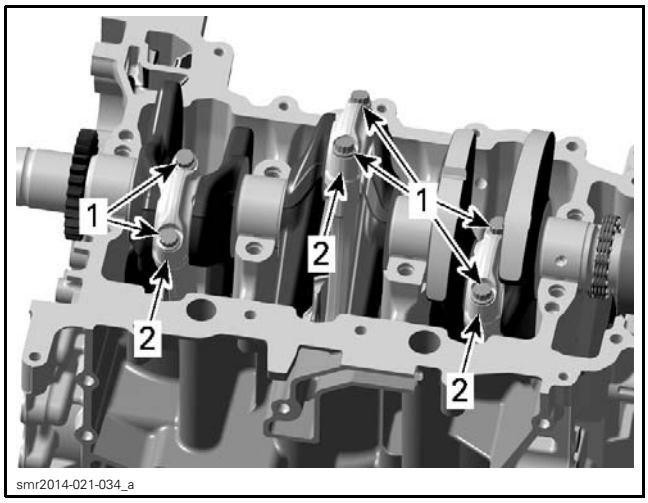

1. Connecting rod screws
2. Connecting rod cap

3. Remove *CRANKSHAFT* as per procedure in this subsection.
4. Turn cylinder block and push piston with connecting rod out of the cylinder.

Piston and Connecting Rod Disassembly

1. Remove one piston pin circlip and discard it.

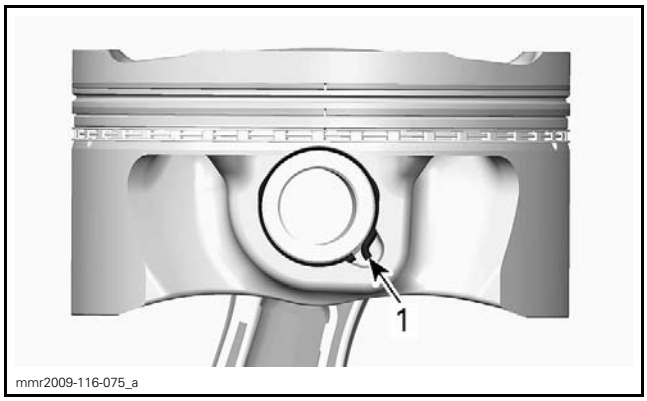

TYPICAL
1. Piston pin circlip

NOTE: The removal of both piston pin circlips is not necessary to remove the piston pin.

2. Push piston pin out of the piston.

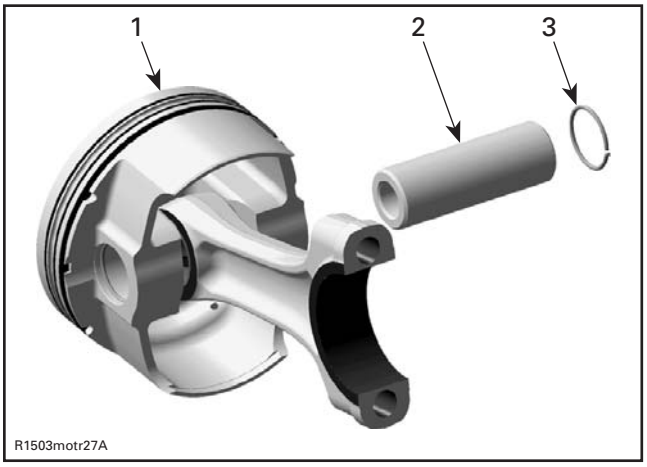

TYPICAL
1. Piston
2. Piston pin
3. Circlip

3. Detach piston from connecting rod.

Connecting Rod Inspection

Connecting Rod Big End Axial Play

Using a feeler gauge, measure distance between butting face of connecting rod and crankshaft counterweight. If the distance exceeds specified tolerance, replace the worn part.

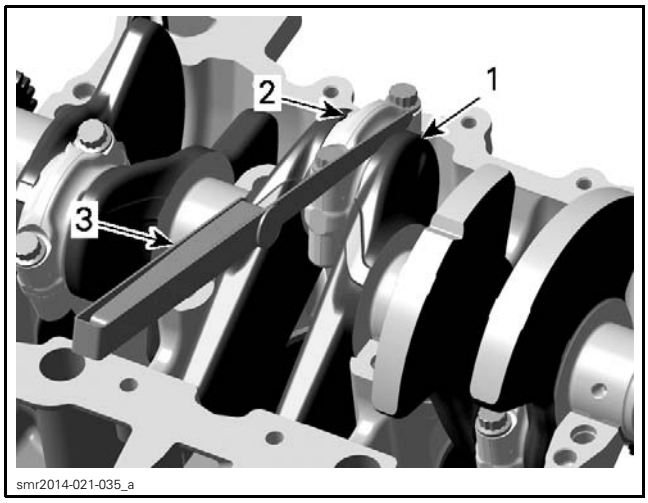

1. Crankshaft
2. Connecting rod
3. Feeler gauge

CONNECTING ROD BIG END AXIAL PLAY	
NEW	0.100 mm to 0.352 mm (.004 in to .014 in)
SERVICE LIMIT	0.450 mm (.018 in)

Connecting Rod Small End Radial Play

Measure connecting rod small end, using a bore gauge.

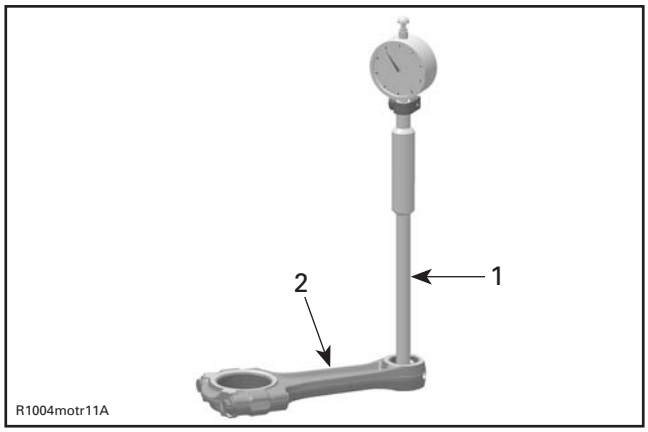

TYPICAL
1. Bore gauge
2. Connecting rod

CONNECTING ROD SMALL END DIAMETER	
NEW	17.010 mm to 17.020 mm (.6697 in to .6701 in)
SERVICE LIMIT	17.060 mm (.6717 in)

If the connecting rod small end diameter is out of specification, replace the connecting rod.

To obtain the radial play, calculate the difference between the piston pin diameter (*PISTON PIN INSPECTION*) and the connecting rod small end inner diameter.

CONNECTING ROD SMALL END RADIAL PLAY	
SERVICE LIMIT	0.040 mm (.0016 in)

Connecting Rod Big End Radial Play

1. Measure inside diameter of connecting rod big end.
   1.1 Install the OLD plain bearings as they were mounted initially.
   1.2 Perform the tightening procedure as described in *PISTON AND CONNECTING ROD INSTALLATION* in this subsection.

   NOTE: To measure the connecting rod big end diameter, ALWAYS use the OLD connecting rod screws.

   1.3 Measure inside diameter in longitudinal direction of the connecting rod.

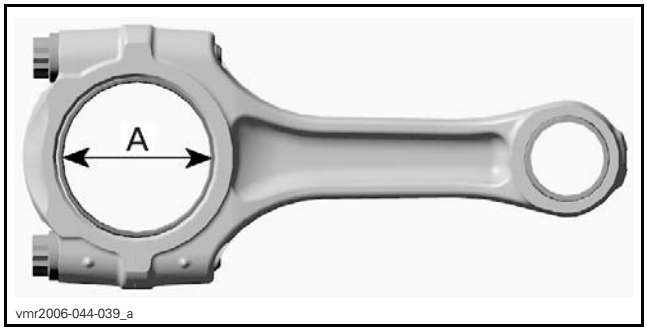

TYPICAL
A. Connecting rod big end bearing

CONNECTING ROD BIG END DIAMETER	
SERVICE LIMIT	36.06 mm (1.4197 in)

To obtain the connecting rod big end radial play, calculate the difference between the big end diameter and the crankshaft pin diameter (see *CRANKSHAFT INSPECTION*).

CONNECTING ROD BIG END RADIAL PLAY	
SERVICE LIMIT	0.080 mm (.0031 in)

If connecting rod big end diameter is out of specification, install NEW plain bearings.

Piston Pin Inspection

Using synthetic abrasive woven, clean piston pin from deposits.

Inspect piston pin for scoring, cracks or other damage.

Measure piston pin diameter, using a micrometer. See the following illustration for the proper measurement position.

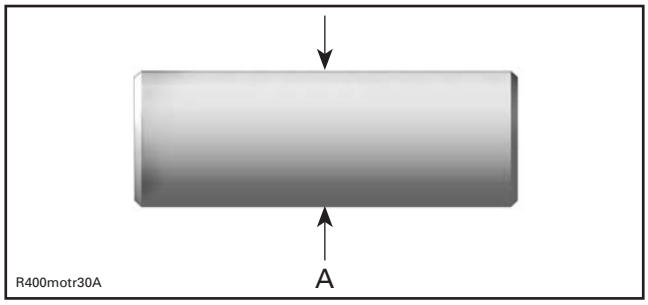

TYPICAL
A. Measure piston pin diameter here

PISTON PIN DIAMETER	
NEW	16.996 mm to 17.00 mm (.6691 in to .6693 in)
SERVICE LIMIT	16.986 mm (.6687 in)

Replace the piston pin if it is out of specification.

Piston Inspection

Inspect piston for scoring, scuffing, cracks or other damage. Replace piston and piston rings if necessary.

Using a micrometer, measure piston perpendicularly (90°) to piston pin axis at 8.5 mm (11/32 in) from the skirt edge.

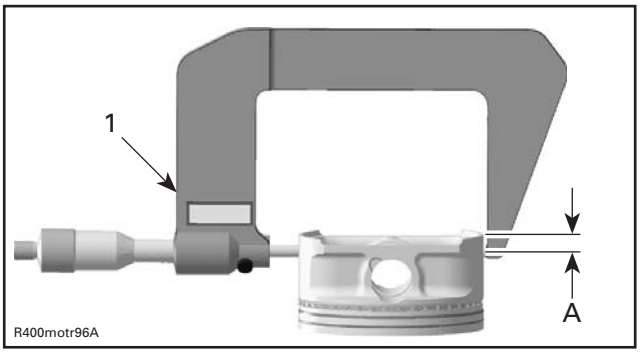

TYPICAL
1. Measuring perpendicularly (90°) to piston pin axis
A. 8.5 mm (11/32 in)

PISTON MEASUREMENT	
NEW	73.950 mm to 73.966 mm (2.911 in to 2.912 in)
SERVICE LIMIT	73.92 mm (2.9102 in)

Replace piston if it is out of specification.

Piston/Cylinder Clearance

1. Adjust and lock a micrometer to the piston dimension.

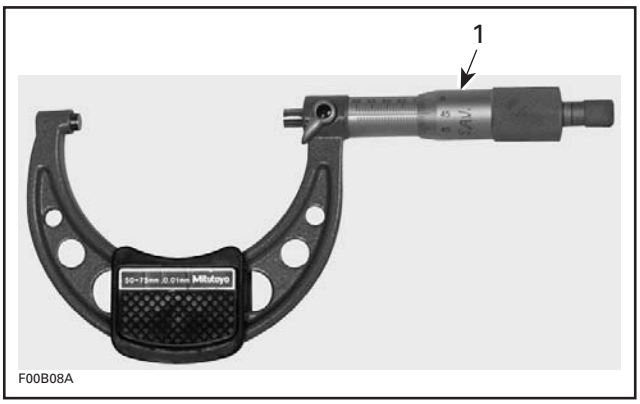

TYPICAL
1. Micrometer set to the piston dimension

NOTE: Make sure used piston is not worn.

2. With the micrometer locked at step 1, adjust a cylinder bore gauge to the micrometer dimension and set the indicator to 0 (zero).

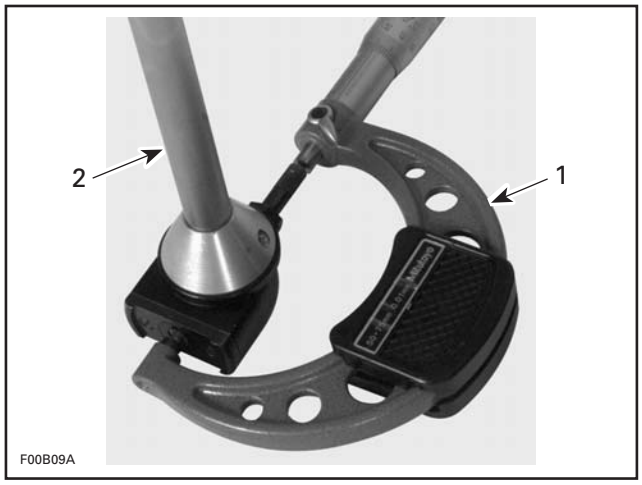

TYPICAL
1. Use the micrometer to set the cylinder bore gauge
2. Cylinder bore gauge

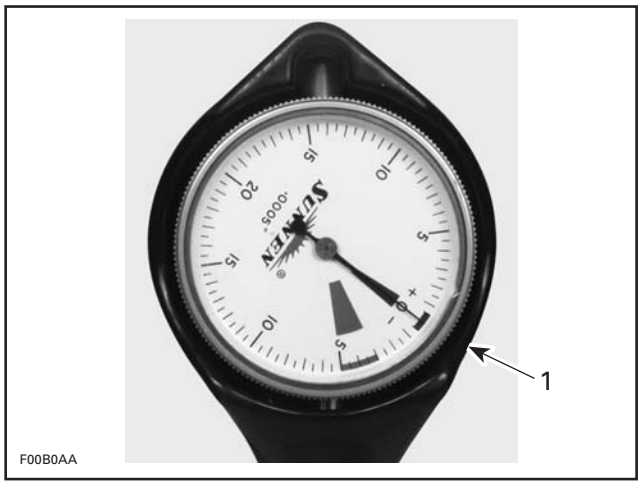

TYPICAL
1. Indicator set to 0 (zero)

NOTE: Make sure the cylinder bore gauge indicator is set exactly at the same position as with the micrometer, otherwise the reading will be false.

3. Position the cylinder bore gauge 35 mm (1-3/8 in) below the cylinder head mating surface, measuring perpendicularly (90°) to piston pin axis.
4. Read the measurement on the cylinder bore gauge. The result is the exact piston/cylinder clearance.

PISTON/CYLINDER CLEARANCE	
NEW	0.037 mm to 0.067 mm (.0015 in to .0026 in)
SERVICE LIMIT	0.08 mm (.0031 in)

If clearance exceeds the specified tolerance, replace the piston and repeat the measurement procedure.

Piston and Connecting Rod Assembly

For assembly, reverse the disassembly procedure. Pay attention to the following details.

1. Apply engine oil on the piston pin.
2. Insert piston pin into piston and connecting rod.

NOTE: Ensure to reinstall all parts in their original position as marked during removal.

3. Install NEW piston pin circlip(s).

REQUIRED TOOL	
PISTON CIRCLP INSTALLER (P/N 529 036 207)	

NOTICE Always replace removed piston pin circlips by NEW ones.

3.1 Place the circlip in the sleeve and push piston circlip installer handle until circlip reaches the mid position in the sleeve.

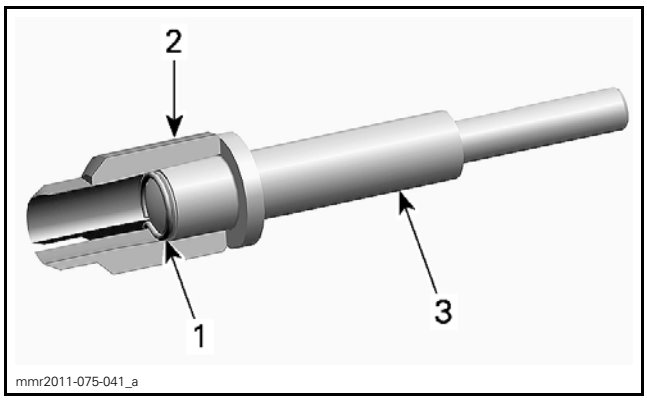

TYPICAL
1. Circlip
2. Sleeve
3. Installer handle

3.2 Put the distance sleeve on the installer handle.

3.3 Push piston circlip installer handle until distance sleeve makes contact with the sleeve.

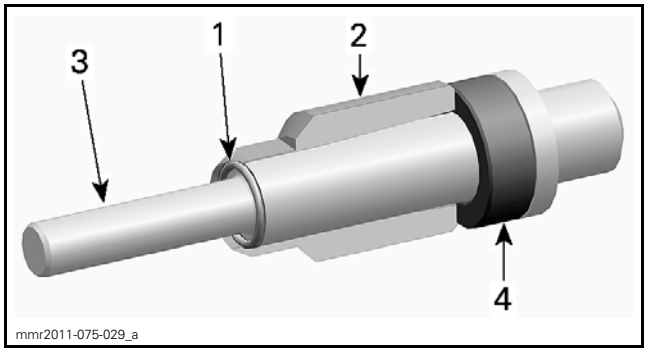

1. Circlip
2. Sleeve
3. Installer handle
4. Distance sleeve

3.4 Remove distance sleeve and insert installer handle into the sleeve.

3.5 Insert the end of the handle into the piston pin, then push to engage the circlip into the piston groove.

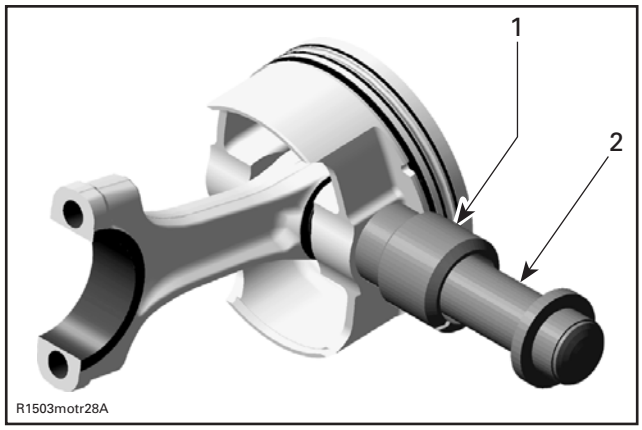

TYPICAL
1. *Sleeve with piston circlip inside*
2. *Piston clip installer handle*

NOTE: Take care that the hook of the piston pin circlip is positioned properly.

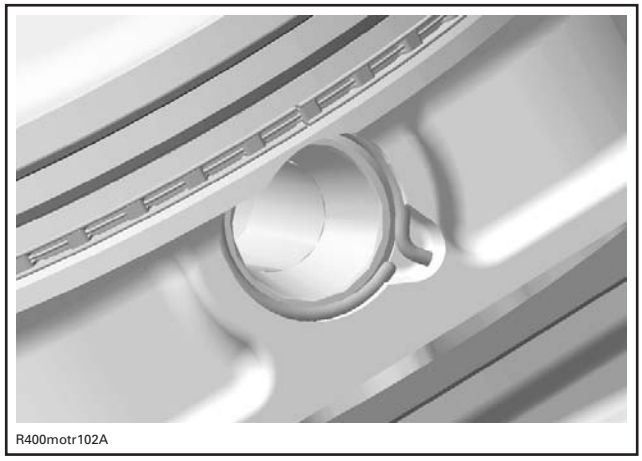

CORRECT POSITION OF THE PISTON PIN CIRCLIP

NOTICE **If piston pin circlip installation fails, repeat step 3 by using a NEW circlip.**

4. Correctly install plain bearings and carefully clean split surface on both sides (cracked area) with compressed air.

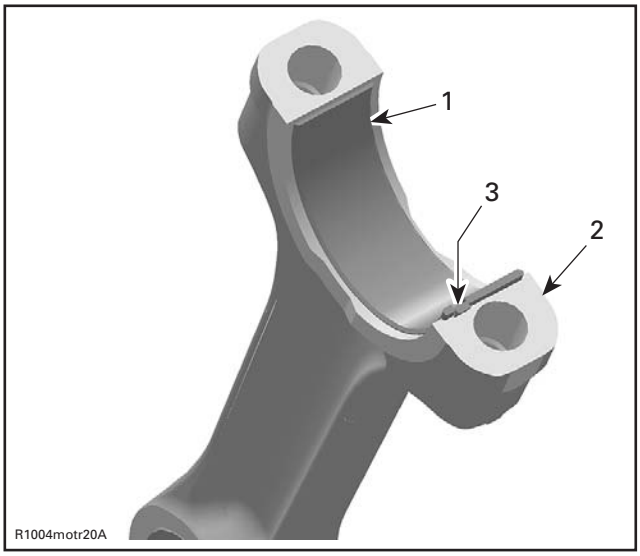

TYPICAL
1. *Half bearing of connecting rod big end*
2. *Split surface of the connecting rod*
3. *Protrusion of bearing in line with connecting rod groove*

NOTICE **The arrow on top of the piston and the punched marks on the connecting rods must always point towards exhaust.**

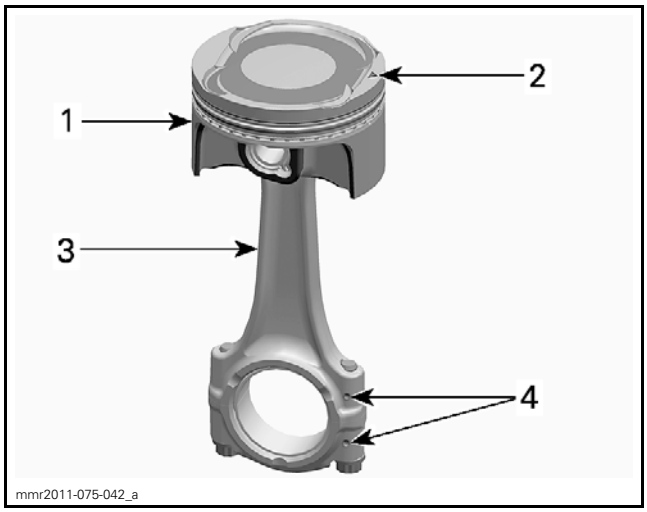

1. *Piston*
2. *Arrow on top*
3. *Connecting rod*
4. *Punched marks*

Piston and Connecting Rod Installation

1. Use engine oil and lubricate:
   - Piston
   - Piston rings
   - Cylinder bore
   - Connecting rod bearings.
2. Slide piston into cylinder bore. Pay attention to the following.

REQUIRED TOOL	
PISTON RING COMPRESSOR (P/N 529 036 208)	

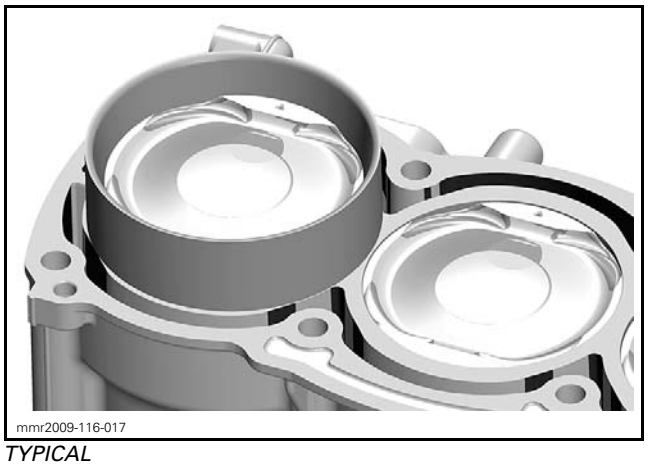

TYPICAL

2.1 If reused, install piston in its original bore.

2.2 Make sure piston rings are properly spaced.

NOTICE **The ring gaps of both compression rings should always be 180° from each other and 90° from the arrow on top of the piston.**

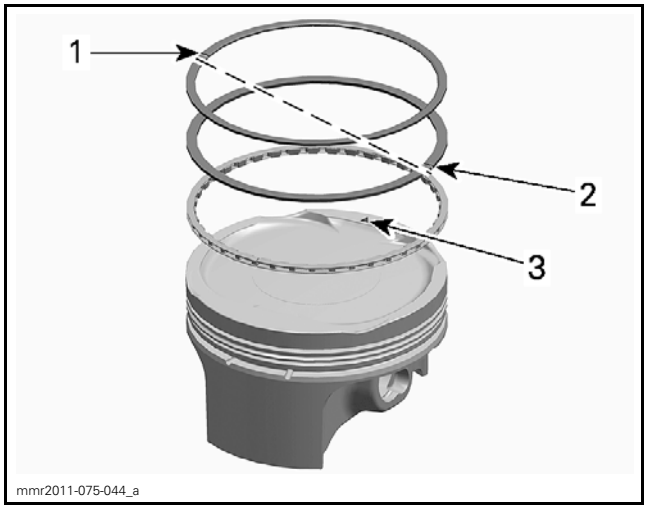

RING GAPS AT 180° FROM EACH OTHER AND 90° FORM ARROW
1. *Rectangular ring - ring gap*
2. *Taper-face ring - ring gap*
3. *Arrow*

2.3 The arrow on top of the piston must point towards exhaust.

NOTICE **Piston installed with the arrow in the wrong direction would cause serious engine damage.**

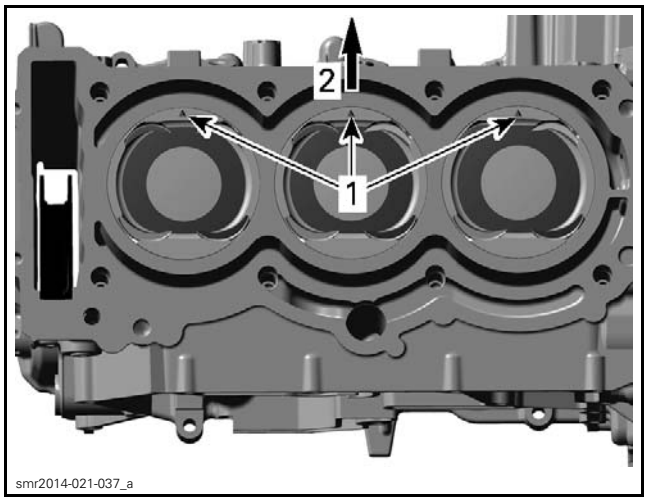

1. *Arrows*
2. *Exhaust*

3. Turn cylinder block upside down.
4. Install *CRANKSHAFT* as per procedure in this subsection.
5. Oil the crankshaft pin.
6. Install connecting rod caps.

NOTE: Printed marks on connecting rod and cap must point together.

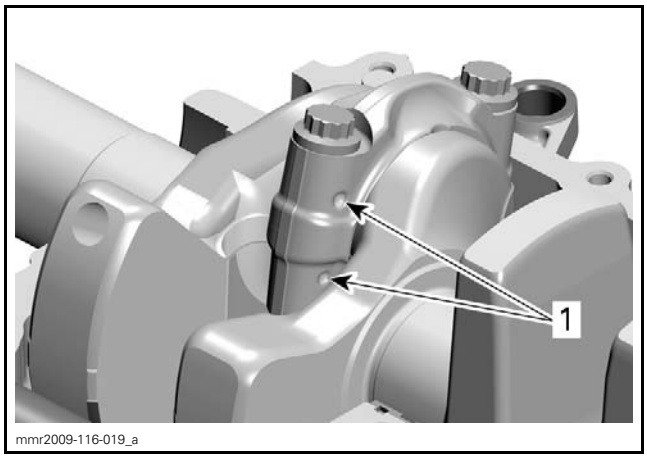

TYPICAL
1. *Printed marks*

NOTICE **This assembly uses stretch screws. Always use NEW screws and strictly adhere to the tightening procedure.**

7. Tighten connecting rod screws as follows:

7.1 Torque both connecting rod screws of a connecting rod.

CONNECTING ROD SCREWS TIGHTENING SEQUENCE	
FIRST STEP	12 N•m ± 0.2 N•m (106 lbf•**in** ± 2 lbf•**in**)

7.2 Use a torque angle gauge to carry out the second step.

CONNECTING ROD SCREWS TIGHTENING SEQUENCE	
SECOND STEP	Additional 70° ± 5°

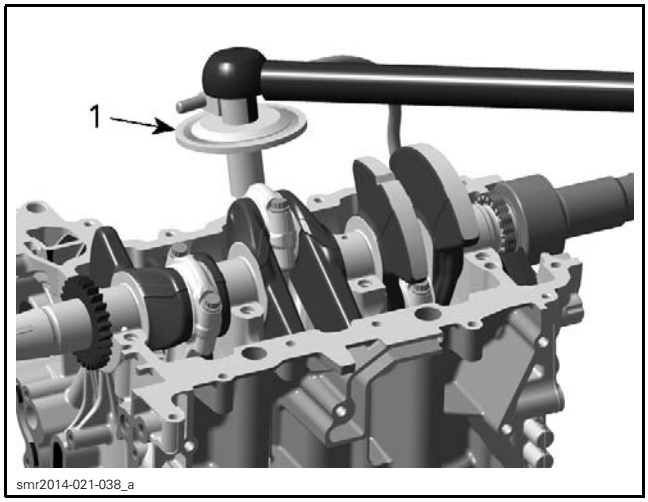

1. Torque angle gauge

NOTICE **Failure to strictly follow this procedure may cause screws to loosen and lead to severe engine damage.**

8. Install all other removed parts.

PISTON RINGS

Piston Ring Removal

1. Remove piston, see procedure in this subsection.
2. Remove rings from piston.

Piston Ring Inspection

Ring/Piston Groove Clearance

Using a feeler gauge measure each ring/piston groove clearance.

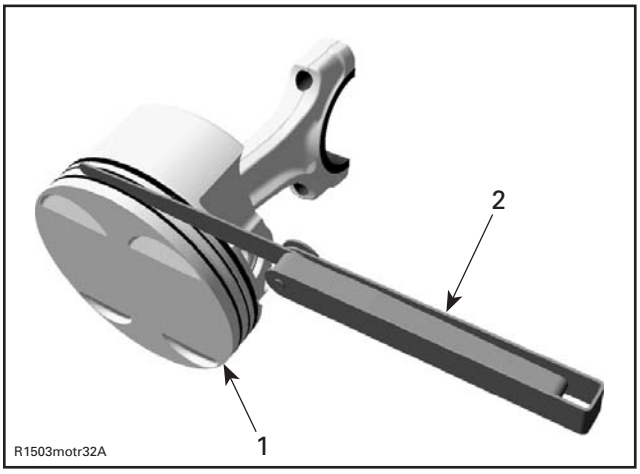

TYPICAL
1. Piston
2. Feeler gauge

RING/PISTON GROOVE CLEARANCE	
UPPER COMPRESSION RING	
NEW	0.030 mm to 0.066 mm (.0012 in to .0026 in)
SERVICE LIMIT	0.12 mm (.0047 in)
LOWER COMPRESSION RING	
NEW	0.020 mm to 0.056 mm (.0008 in to .0022 in)
SERVICE LIMIT	0.12 mm (.0047 in)
OIL SCRAPER RING	
NEW	0.010 mm to 0.040 mm (.0004 in to .0016 in)
SERVICE LIMIT	0.15 mm (.0059 in)

If clearance is out of specification, the piston and rings should be replaced.

Ring End Gap

1. Place piston ring in the cylinder bore between 8 mm to 16 mm (5/16 in to 5/8 in) from the top of cylinder.

NOTE: In order to correctly position the ring in the cylinder bore, use a piston as a pusher.

2. Using a feeler gauge, check ring end gap.

RING END GAP	
UPPER COMPRESSION RING	
NEW	0.20 mm to 0.35 mm (.008 in to .014 in)
SERVICE LIMIT	1.2 mm (.047 in)
LOWER COMPRESSION RING	
NEW	0.30 mm to 0.50 mm (.012 in to .02 in)
SERVICE LIMIT	1.2 mm (.047 in)
OIL SCRAPER RING	
NEW	0.20 mm to 0.70 mm (.0079 in to .0276 in)
SERVICE LIMIT	1.2 mm (.047 in)

If ring end gap is out of specification, replace piston rings.

Piston Ring Installation

1. Install piston rings in the following order.

   NOTE: Use a ring expander to prevent breakage during installation. The oil ring must be installed by hand.

   1.1 Install oil scraper ring.

   1.2 Install the lower compression ring with the letter "N" facing up.

   1.3 Install upper compression ring with the letter "N" facing up.

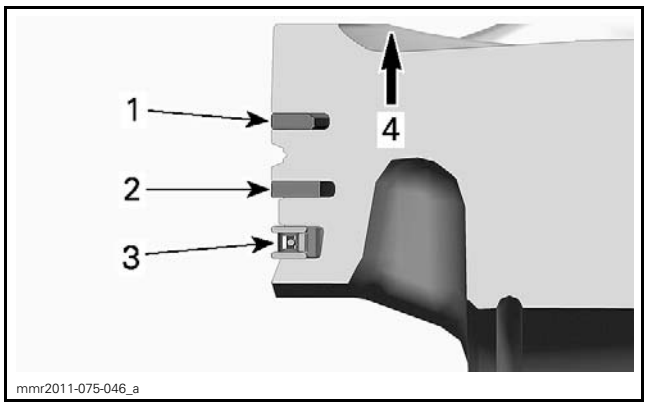

1. Rectangular ring
2. Taper-face ring
3. Oil scraper ring
4. Letter "N" facing up

NOTICE Ensure that upper and lower compression rings are not interchanged.

2. Check that rings rotate smoothly after installation.